SYMBOL DEFINITION			MISSING SYMBOLS
A DIMENSION WITHOUT AN INSPECTION REPORT SYMBOL ⬭ DOES NOT REQUIRE INSPECTION. IT MAY BE CONTROLLED ON THE INDIVIDUAL COMPONENT DRAWING.	TOTAL NO OF INSPECTIONS REQUIRED	5	1 3-4 6 9
	LAST NO. USED	10	

DATE	STG	REV	N/P	CHG	ZONE	REVISION HISTORY	AUTH	DR	APVD 1	APVD 2
07FE03	-	06	-	-	-	12191152 THRU 12191157 & 12191221 THRU 12191223 - REVISED TOOL QUALIFICATION DRAWING	235238	JS	JS	CD
11AP03	-	07	-	-		12191221,12191222,12191223-CHANGED MYLAR STRIP MATERIAL-SEE TQD	239244	SS	SS	CD
19FE04	R	08	-	-		12191221-23 & 12191152-57 - UPDATED PDM ATTRIBUTES; 12191226-34 - UPDATED MAT'L SPEC; ALL ACTIVE PARTS - REMOVED LABEL	251754	MDH	JAA	RM
09MR04	R	09	-	-		12191221-23 - CORRECTED REVISION LEVELS ON DRAWINGS	252831	LMB	LMB	MR
30MR04	R	10	-	-		ADDED CUSTOMER SPECIFIC DRAWING	253027	MJM	MJM	LN
02JL04	R	11	-	-		121912221,12191222,12191223 - CORRECTED ECL	256636	LLJ	LLJ	MR
23FE05	R	12	-	-		ALL ACTIVE PARTS - ADDED RESTRICTED STATUS, ALTERNATE MATL SPEC, SEE NOTE 3 TO CABLE O.D. DIN AND DIM 'C'	265282	RH	RH	MR
24AU05	R	13	-	-		ALL PARTS - REVISED CHART; 12191227 - REVISED INTERNAL NECK GROOVE, ADDED MYLAR/SEAL ASSEMBLY DETAIL	270772	PCP	PCP	MR
19MY06	R	14	-	-		ALL ACTIVE PARTS - REMOVED DIMS #4 & #6 FROM DWG AND DIM #7 ("F") FROM CHART	280824	AB	BKD	MR
08JN07	R	15	-	-		ADDED 13649970, 13652517 AND RELEASED, ALL ACTIVE PARTS - REVISED CHART	401495	PCP	PCP	TAV
03DE07	R	16	-	-		12191235,13667445,15305351,15336674, 15366021-22,15366060-61,15366063-67 & 15473821 - WERE ON SHT 02; ALL PARTS - UPDATED CHART INFO AND SHEET 1 OF 1 WAS SHEET 1 OF 2; 15473821 - OBSOLETE	402609	JBD	JAA	MR
06DE07	R	17	-	-		13681284 & 13681285 - RELEASED; 13649970 - RESTRICTED, CABLE O.D. WAS 2.09-2.66, ØC WAS 3.45 & ØG WAS 5.75; 13652517 - RESTRICTED, ØC WAS 3.45 AND ØG WAS 5.75	403110	JBD	JAA	TAV
12MY08	R	18	-	-		13711484 & 13711485 - RELEASED ALL PARTS - UPDATED PDM ATTRIBUTES	404626	HAM	TLD	TAV
22MY08	R	19	-	-		13681284 & 13681285 - MAT'L DESCRIPTION WAS FVMQ ORANGE & FVMQ BLUE	404799	TLD	TLD	TAV
21JL08	R	20	-	-		13649970, 13681284, 13681285, 13652517 - OBSOLETE	405458	ACG	FKV	TAV
11AU09	R	21	-	-		12191226 & 15366021 - UPDATED PDM ATTRIBUTES	408599	JOA	FKV	MPR
17SE09	R	22	-	-		12191226-34, 15366060, 15366021 & 13667445 - UPDATED PDM ATTRIBUTES	408962	JOA	FRG	MPR
19NO09	R	23	-	-		ALL ACTIVE PARTS - UPDATED PDM ATTRIBUTES; 13667445 - RESTRICTED; 15305351 - DIM Ø3.9 +0.2/-0.05 WAS DIM ØG ±0.1	409494	JTZ	FKV	MPR
03DE09	R	24	-			15366021 - UPDATED PDM ATTRIBUTES	409594	DGL	DGL	MPR
04MR10	R	25	-	-		15305351 - UPDATED PDM ATTRIBUTES	410123	DGL	DGL	MPR
10JN10	R	26	-	-		13824958 - RELEASED	411023	MAB	JAA	VMR
15SE10	R	27	-	-		13846994 - RELEASED	411974	VMR	VMR	VMR
25OC10	R	28	-	-		ALL PARTS - ØC +0.15/-0.1 WAS ØC ±0.1, TYPE 104 WAS TYPE 101 EXCEPTION	412355	DMC	DMC	MPR
14OC11	R	29	-	-		ALL ACTIVE PARTS - ADDED OPTIONAL CONSTRUCTION 1, 2 & 3 VIEWS	415729	JTZ	JTZ	ACM
08MR12	R	30	-	-		ALL PARTS - ADDED REEL NUMBER	417407	EGH	EGH	EGH
09JA13	R	31	-	-		15502631 - RELEASED	420941	JOR	JFF	JOR
21JA13	R	32	-	-		13667445 - UPDATED PART AVAILABILITY; 15502631 - ØG WAS 6.35	421164	JOR	JSM	JOR
03AP13	R	33	-	-		15473821 - UPDATED MATERIAL CALLOUT AND DIM 3.9 +0.2/-0.05 WAS DIM 3.9+0.1/-0.05	421905	CBG	CBG	MAC
23MY13	R	34	-	-		15502631 - UPDATED PART AVAILABILITY	422688	JOR	FRE	JOR
05JN13	R	35	-	-		12191226 - UPDATED PART AVAILABILITY	422854	JOR	JSM	JOR
16AP14	R	36	-	-		ALL PARTS - ADDED "25% OF WALL THK DISTANCE IS MAX NEGATIVE SPRUE PERMISSIBLE" NOTE	426282	CAR	JAA	EGH
21AP15	R	37	-	-		ALL ACTIVE PARTS - ADDED OPTIONAL CONSTRUCTION 4 VIEW AND OPTIONAL CONSTRUCTION 3 REVISED GRAPHICS	429305	JVR	JVM	JGR

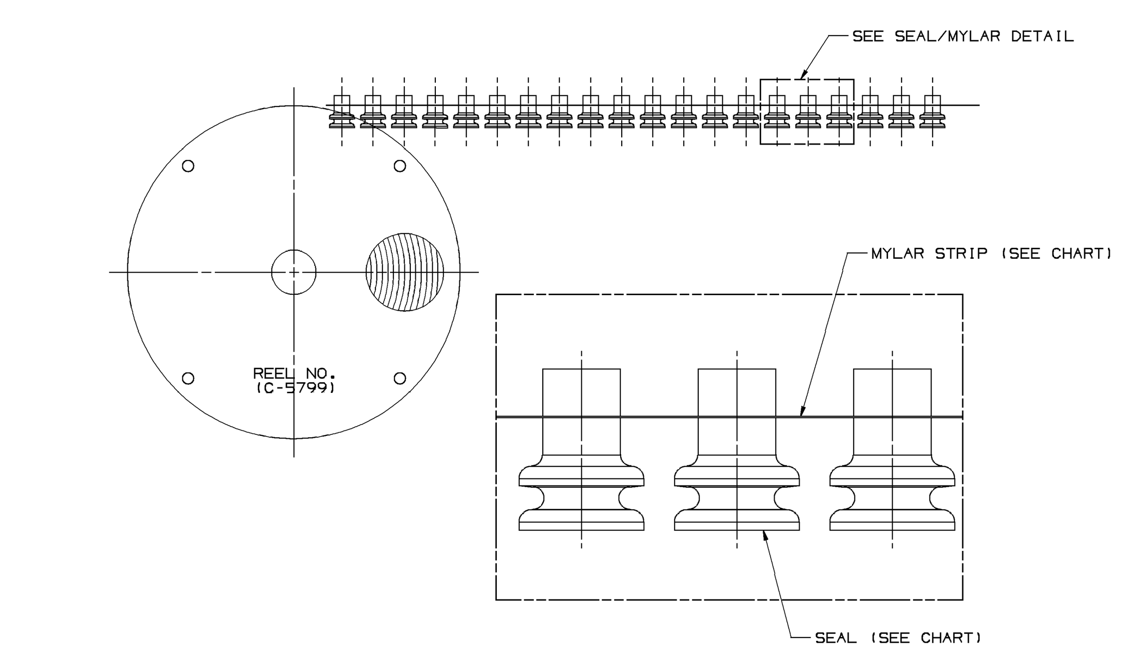

SEAL/MYLAR ASSEMBLY DETAIL

NO SCALE

TYPE 101

NOTES

1. THE MYLAR TAPE IS ONLY A CARRIER USED AS A PROCESS AID AND IS NOT PART OF THE FINAL HARNESS ASSEMBLY.
2. WHEN PARTS ARE SHIPPED, THEY MUST BE PACKED IN PLASTIC BAGS OR SHIPPING CONTAINERS MUST BE LINED WITH PLASTIC LINERS. BAGS OR LINER MUST BE SEALED TO AVOID ENTRY OF FOREIGN MATTER.

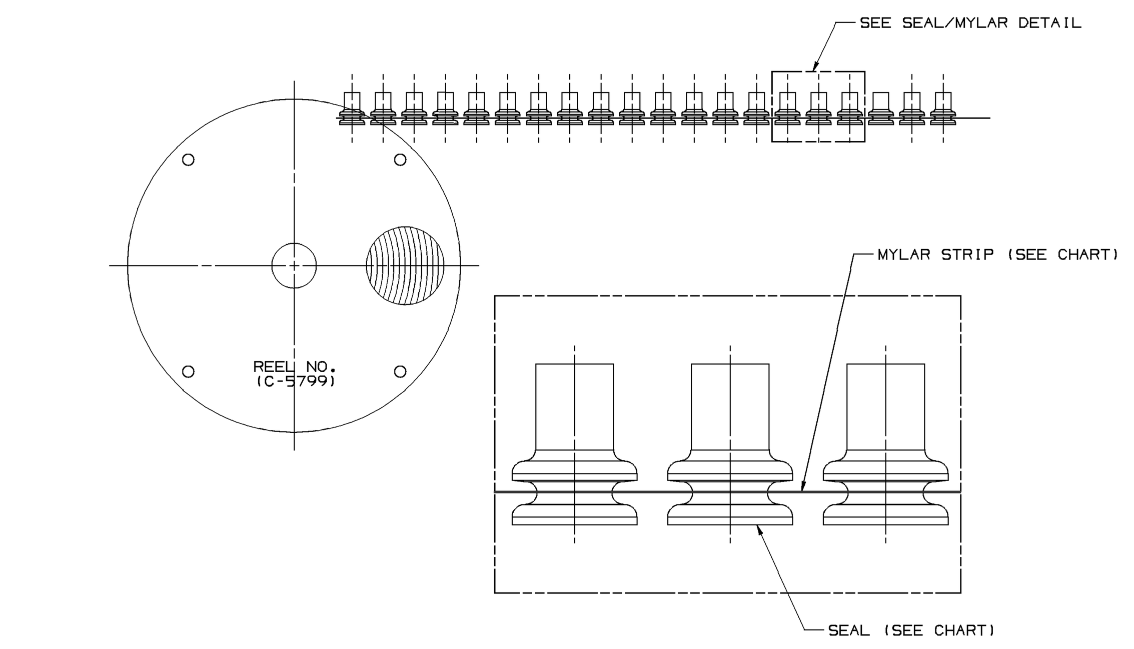

SEAL/MYLAR ASSEMBLY DETAIL

NO SCALE

TYPE 102

SAME AS TYPE 101 EXCEPT AS SHOWN

NOTES

1. THE MYLAR TAPE IS ONLY A CARRIER USED AS A PROCESS AID AND IS NOT PART OF THE FINAL HARNESS ASSEMBLY.
2. WHEN PARTS ARE SHIPPED, THEY MUST BE PACKED IN PLASTIC BAGS OR SHIPPING CONTAINERS MUST BE LINED WITH PLASTIC LINERS. BAGS OR LINER MUST BE SEALED TO AVOID ENTRY OF FOREIGN MATTER.

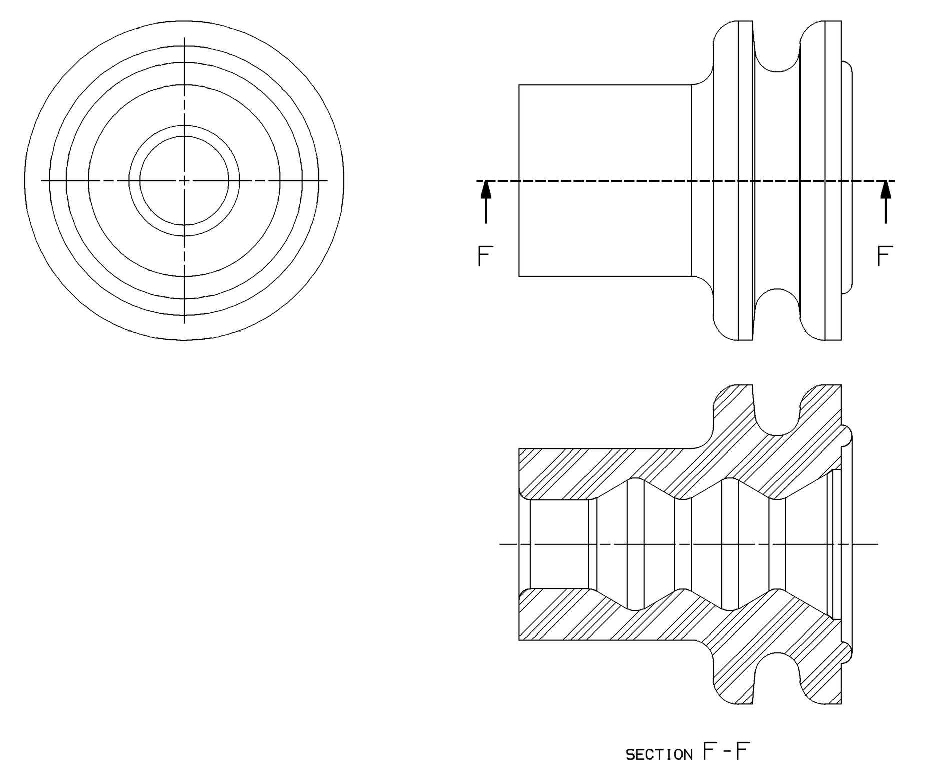

OPTIONAL CONSTRUCTION 1

FOR EXISTING TOOL ONLY, NOT TO BE USED ON NEW TOOLS

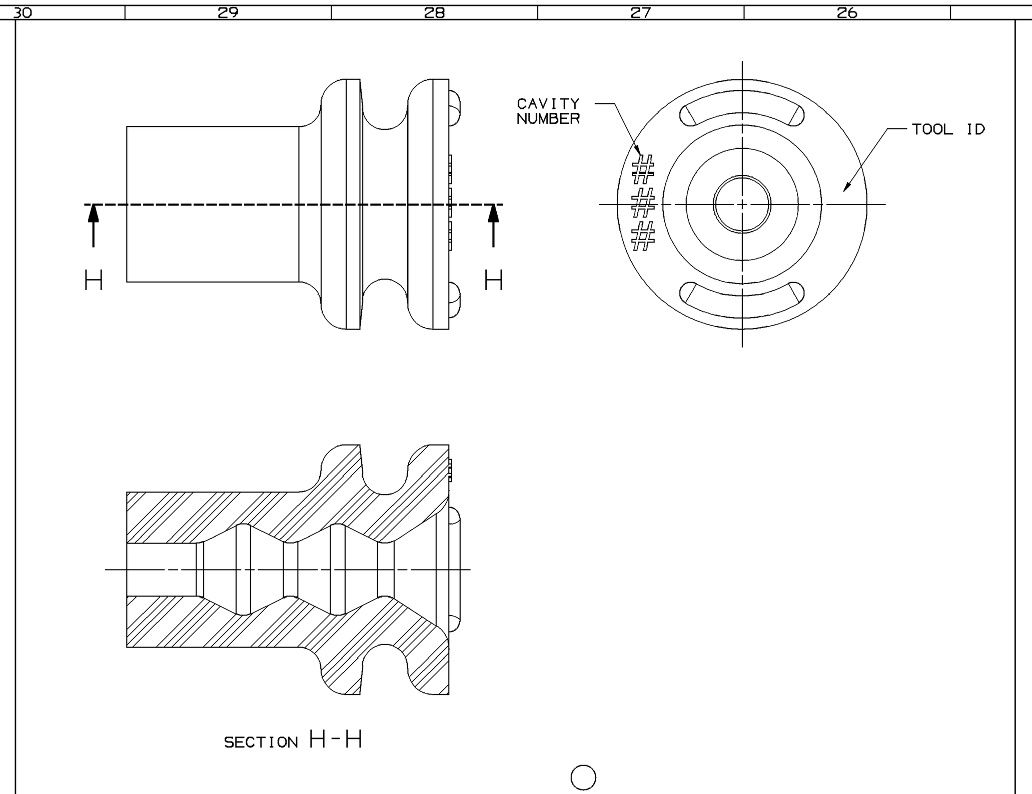

OPTIONAL CONSTRUCTION 4

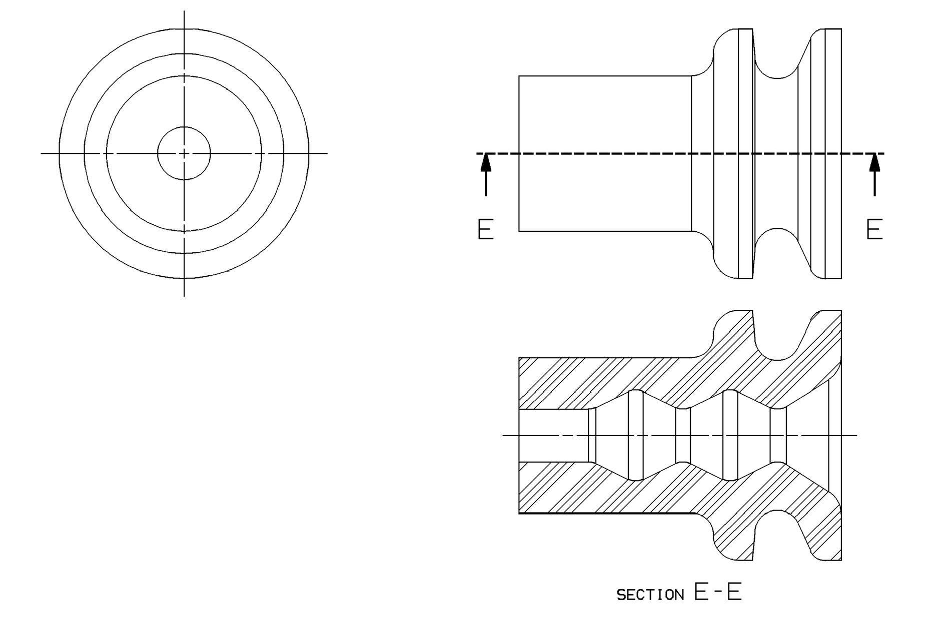

OPTIONAL CONSTRUCTION 2

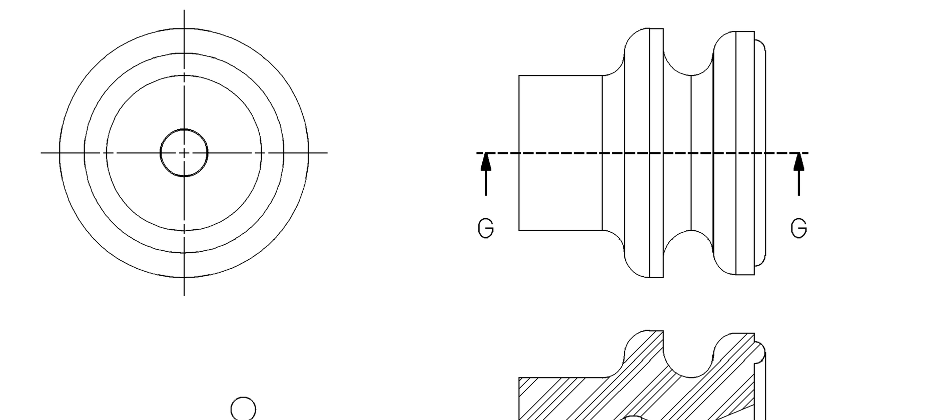

OPTIONAL CONSTRUCTION 3

THIS IS THE PREFERRED CONSTRUCTION FOR NEW TOOL BUILDS (ANTI-STICK RING)

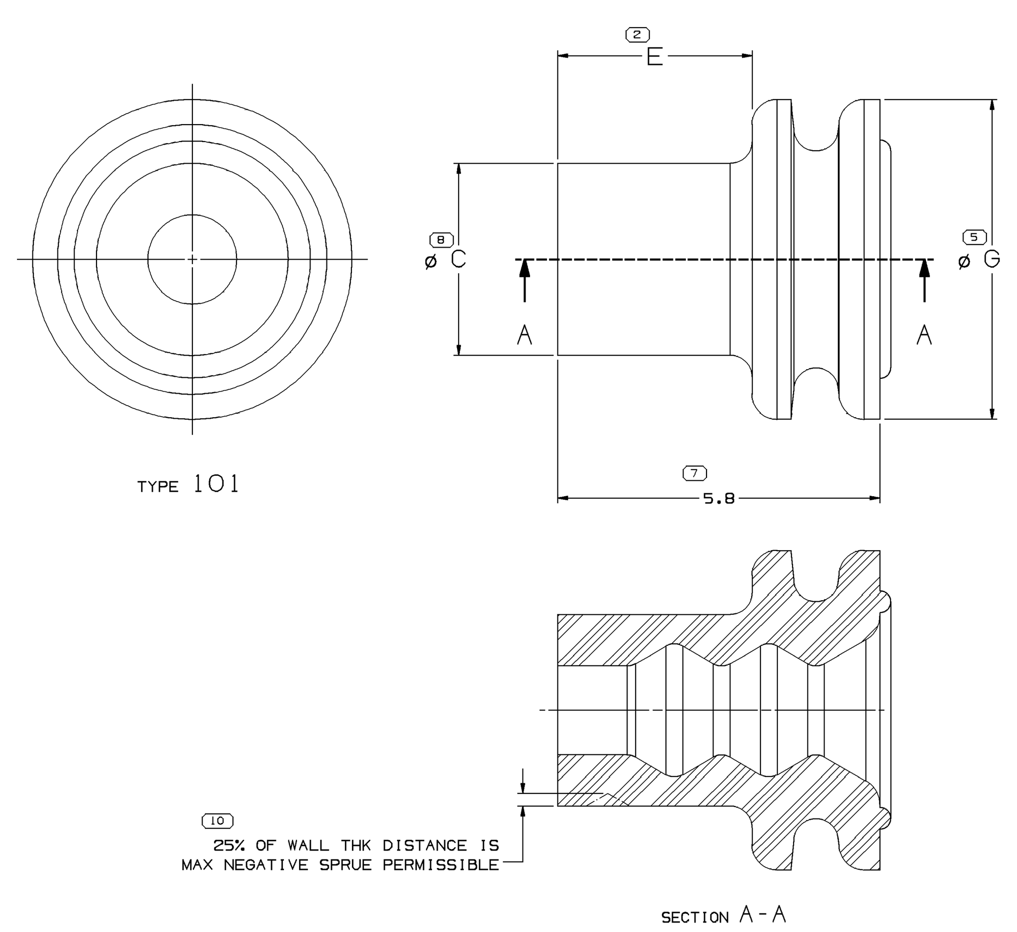

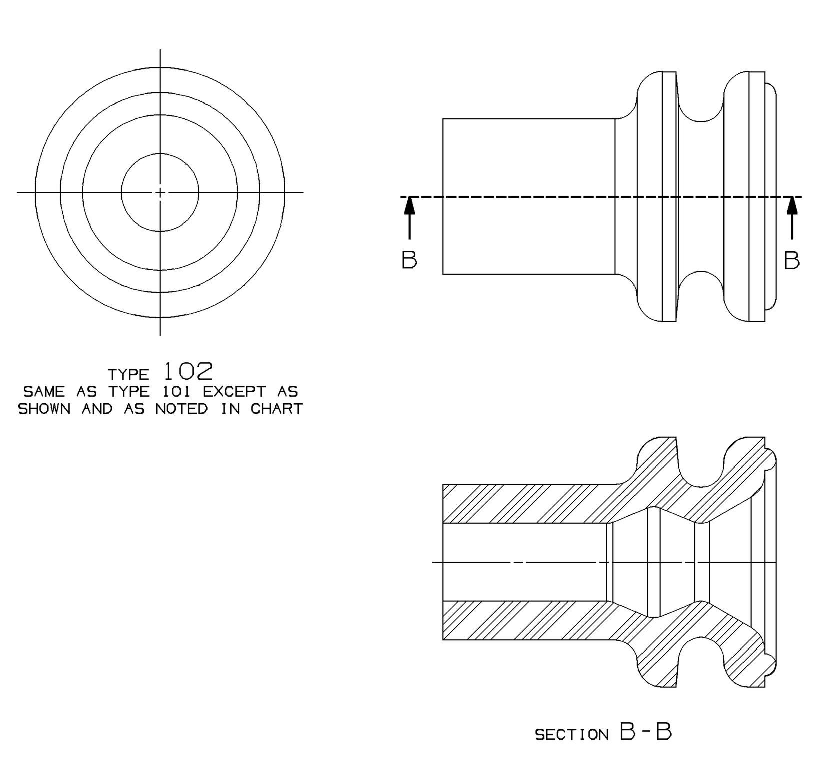

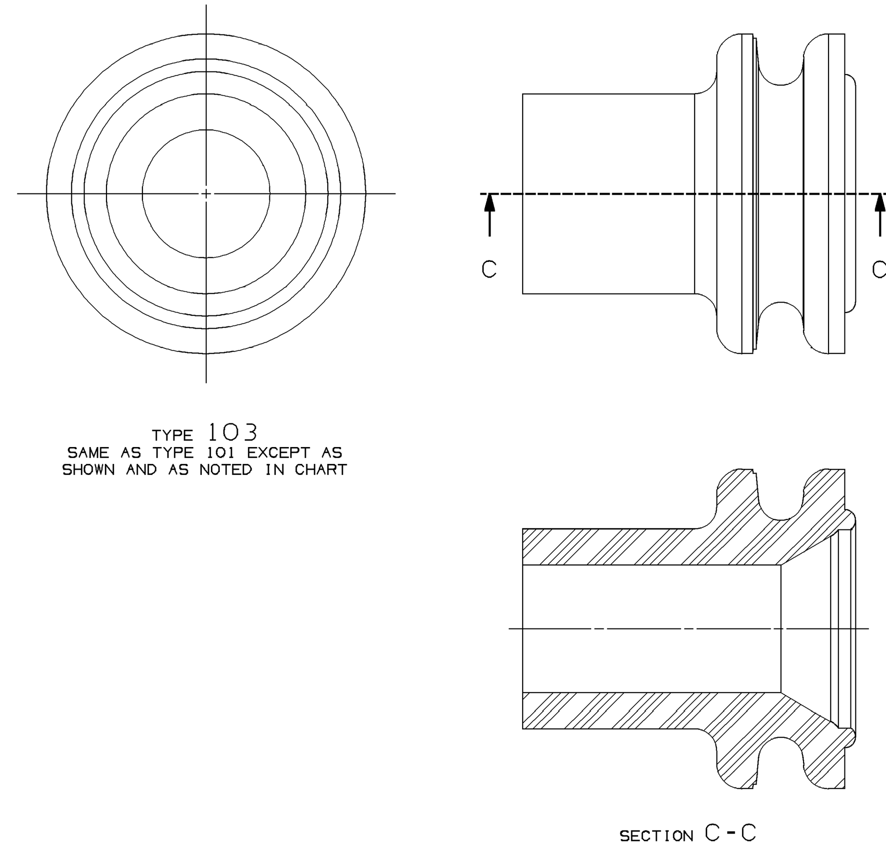

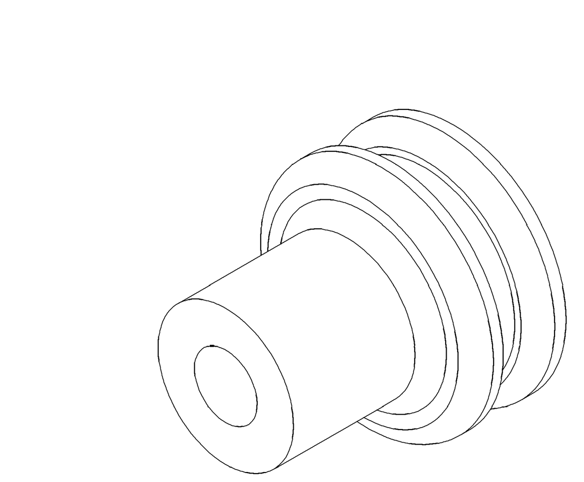

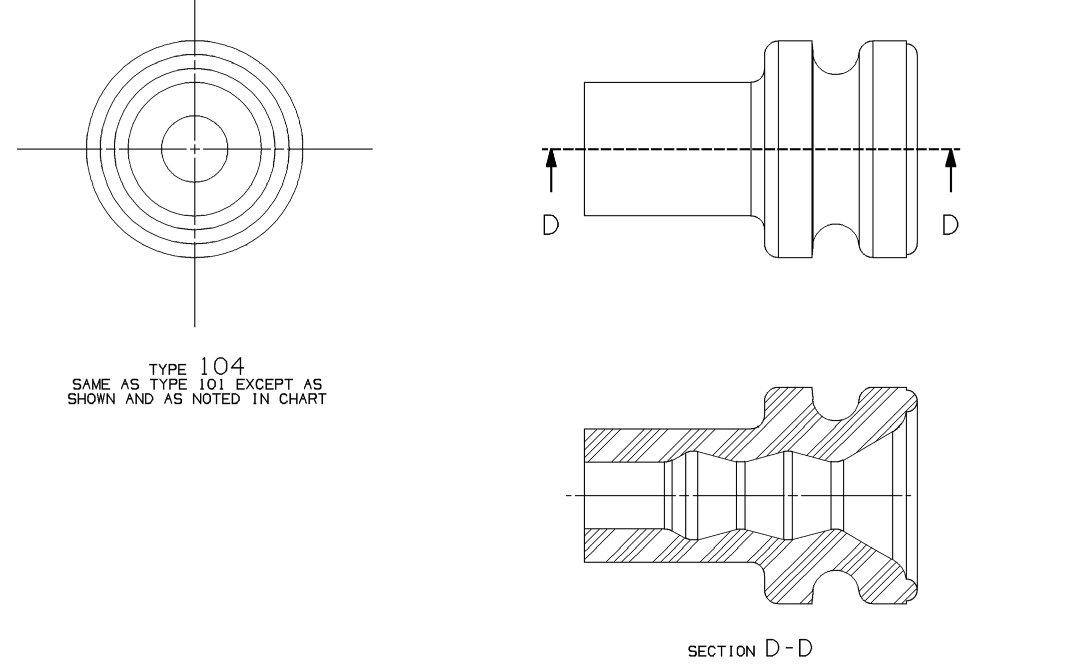

GT 150 3.5 CL (3.2 X 4.0 OVAL INTERNAL CAVITY DIAMETER)

CABLE SEAL	REV	N/P	USAGE	REPLACED BY	TYPE	MAT'L SPEC	CABLE O.D. RANGE	ØC +0.15/-0.1	E	ØG	VOL (CM³)	MYLAR & CABLE SEAL ASM	REV	N/P	MYLAR STRIP	TYPE
15473821	02	AA	-	-	102	VMQ SELF-LUBRICATING REDDISH BROWN	2.00-2.20	2.4	3.25	3.9 +0.2/-0.05	0.029	-	-	-	-	-
15366022	01	AU	-	-	101	VMQ SELF-LUBRICATING GREEN	1.40-1.90	2.4	3.2	4 +0.1/-0.05	0.034	-	-	-	-	-
15305351	02	AU	-	-	104	VMQ SELF-LUBRICATING YELLOW	1.70-2.10	2.4	3.25	3.9 +0.2/-0.05	0.033	15305352	A1	-	R0072686	-
12191229	04	AN	RESTRICTED	15366022	101	VMQ SELF-LUBRICATING GREEN	1.40-1.90	2.4	3.25	4 +0.1/-0.05	0.034	12191155	03	AF	M5235002	102

GT 150 (4.0 INTERNAL CAVITY DIAMETER)

CABLE SEAL	REV	N/P	USAGE	REPLACED BY	TYPE	MAT'L SPEC	CABLE O.D. RANGE	ØC +0.15/-0.1	E	ØG ±0.1	VOL (CM³)	MYLAR & CABLE SEAL ASM	REV	N/P	MYLAR STRIP	TYPE
13846994	01	AD	-	-	101	FVMQ RED/BROWN	1.20-1.90	2.8	3.5	4.5	0.041	-	-	-	-	-
13824958	01	AD	-	-	102	FVMQ RED/BROWN	1.86-2.40	2.8	3.5	4.5	0.037	-	-	-	-	-
15366060	02	AJ	-	-	102	VMQ SELF-LUBRICATING BLUE	1.86-2.40	2.8	3.5	4.5	0.037	-	-	-	-	-
15366021	01	AY	-	-	101	VMQ SELF-LUBRICATING WHITE	1.20-1.90	2.8	3.5	4.5	0.041	-	-	-	-	-
13667445	01	AG	RESTRICTED	-	101	VMQ SELF-LUBRICATING WHITE	1.20-1.90	2.8	3.5	4.5	0.041	-	-	-	-	-
12191227	04	AJ	RESTRICTED	15366060	102	VMQ SELF-LUBRICATING BLUE	1.86-2.40	2.8	3.5	4.5	0.037	12191153	B8	-	M5235002	102
12191226	D18	-	RESTRICTED	15366021	101	VMQ SELF-LUBRICATING WHITE	1.20-1.90	2.8	3.5	4.5	0.041	12191152	B9	-	M5235002	102

GT 280 (5.2 INTERNAL CAVITY DIAMETER)

CABLE SEAL	REV	N/P	USAGE	REPLACED BY	TYPE	MAT'L SPEC	CABLE O.D. RANGE	ØC +0.15/-0.1	E	ØG ±0.1	VOL (CM³)	MYLAR & CABLE SEAL ASM	REV	N/P	MYLAR STRIP	TYPE
15366064	01	AT	-	-	101	VMQ SELF-LUBRICATING VIOLET	1.86-2.40	3.45	3.5	5.75	0.067	-	-	-	-	-
15366063	01	AR	-	-	101	VMQ SELF-LUBRICATING GRAY	1.20-1.90	3.45	3.5	5.75	0.073	-	-	-	-	-
15366061	01	AR	-	-	101	VMQ SELF-LUBRICATING DARK RED	2.09-2.66	3.45	3.5	5.75	0.063	-	-	-	-	-
15336674	02	AU	-	-	103	VMQ SELF-LUBRICATING BLUE	2.70-3.20	3.6 ±0.15	3.5	5.75 ±0.15	0.056	-	-	-	-	-
12191231	B17	-	RESTRICTED	15366064	101	VMQ SELF-LUBRICATING VIOLET	1.86-2.40	3.45	3.5	5.75	0.067	12191157	B6	-	M5235004	101
12191230	C16	-	RESTRICTED	15366063	101	VMQ SELF-LUBRICATING GRAY	1.20-1.90	3.45	3.5	5.75	0.073	12191156	B6	-	M5235004	101
12191228	B17	-	RESTRICTED	15366061	101	VMQ SELF-LUBRICATING DARK RED	2.09-2.66	3.45	3.5	5.75	0.063	12191154	B6	-	M5235004	101

GT 280 (5.8 INTERNAL CAVITY DIAMETER)

CABLE SEAL	REV	N/P	USAGE	REPLACED BY	TYPE	MAT'L SPEC	CABLE O.D. RANGE	ØC +0.15/-0.1	E	ØG ±0.1	VOL (CM³)	MYLAR & CABLE SEAL ASM	REV	N/P	MYLAR STRIP	TYPE
15502631	01	AD	-	-	101	VMQ SELF-LUBRICATING BLUE	2.70-3.40	4.25	3.5	6.35 +0.15/-0	0.082	-	-	-	-	-
13711485	01	AF	-	-	101	FVMQ GREEN	1.20-1.90	4.25	3.5	6.35	0.102	-	-	-	-	-
13711484	01	AF	-	-	101	FVMQ RED/BROWN	1.86-2.40	4.25	3.5	6.35	0.096	-	-	-	-	-
13681285	01	AD	RESTRICTED	-	101	FVMQ/VMQ BLEND ORANGE	1.20-1.90	4.25	3.5	6.35	0.102	-	-	-	-	-
13681284	01	AD	RESTRICTED	-	101	FVMQ/VMQ BLEND BLUE	1.86-2.40	4.25	3.5	6.35	0.096	-	-	-	-	-
13652517	02	AC	RESTRICTED	-	101	FVMQ ORANGE	1.20-1.90	4.25	3.5	6.35	0.102	-	-	-	-	-
13649970	02	AC	RESTRICTED	-	101	FVMQ BLUE	1.86-2.40	4.25	3.5	6.35	0.096	-	-	-	-	-
15366067	01	AV	-	-	101	VMQ SELF-LUBRICATING TAN	2.50-3.20	4.25	3.5	6.35 +0.15/-0	0.085	-	-	-	-	-
15366066	01	AT	-	-	101	VMQ SELF-LUBRICATING YELLOW	1.86-2.40	4.25	3.5	6.35	0.096	-	-	-	-	-
15366065	01	AU	-	-	101	VMQ SELF-LUBRICATING ORANGE	1.20-1.90	4.25	3.5	6.35	0.102	-	-	-	-	-
12191235	03	AT	-	-	101	VMQ SELF-LUBRICATING VIOLET	3.40-3.90	4.25 +0.2/-0	3.5	6.35	0.063	12191224	B1	-	R0065622	-
12191234	D13	-	RESTRICTED	15366067	101	VMQ SELF-LUBRICATING TAN	2.50-3.20	4.25	3.5	6.35 +0.15/-0	0.085	12191223	D9	-	M5235003	101
12191233	B17	-	RESTRICTED	15366066	101	VMQ SELF-LUBRICATING YELLOW	1.86-2.40	4.25	3.5	6.35	0.096	12191222	B9	-	M5235003	101
12191232	C16	-	RESTRICTED	15366065	101	VMQ SELF-LUBRICATING ORANGE	1.20-1.90	4.25	3.5	6.35	0.102	12191221	B9	-	M5235003	101

NOTES

1. UNLESS OTHERWISE SPECIFIED AND/OR INDICATED:

   DIMENSIONS ARE TO FACE OF VIEW SHOWN AND AUTOMATICALLY ROUNDED BY COMPUTER FOR INSPECTION (SEE MATH MODEL FOR PRECISE DIMENSIONS). FOR ALL OTHER DIMENSIONS NOT SHOWN BUT REQUIRED FOR TOOL BUILD, SEE MATH MODEL FOR PRECISE TOOL PATH DATA.
2. PARTS SHOULD BE MADE FROM VIRGIN MATERIAL ONLY.
3. CABLE SEALS MADE FROM LOWER OIL MATERIAL (1-2%) ARE RECOMMENDED FOR THE LOOSE PIECE SEAL APPLICATION PROCESS.
4. CABLE SEALS MADE FROM HIGHER OIL MATERIAL (4%) ARE RECOMMENDED FOR THE MYLAR/CABLE SEAL ASSEMBLY PROCESS.
5. THIS PRODUCT IS NOT CATEGORIZED AS AN APPEARANCE ITEM, MINOR IMPERFECTIONS INCLUDING, BUT NOT LIMITED TO, FLOW MARKS, COLOR BLEMISHES, GATE VESTIGE, AND SOFT FLASH THAT DO NOT AFFECT THE FIT, FORM, OR FUNCTION OF THE PART ARE PERMISSIBLE PER DPNP-4.7-CS-01.

⬭5⬭ PROCESS SENSITIVE DIMENSION

DIMENSIONS ENCLOSED IN ( ) INDICATE REFERENCE DIMENSIONS AND NO TOLERANCE LIMITS ARE ESTABLISHED

DIMENSIONAL RANGE (MM)					CHART E
FROM / TO	0 / 20	> 20 / 30	> 30 / 70	> 70 / 100	>100
TOLERANCE UNLESS OTHERWISE SPECIFIED	±0.15	±0.2	±0.3	±0.4	±0.5

ANGULAR TOLERANCE ±2°

A ——— LINE DRAWN THROUGH A PART NUMBER INDICATES THAT PHYSICAL PARTS ARE NOT AVAILABLE FOR ORDERING.

PART NUMBERS THAT DO NOT HAVE A LINE PRESENT INDICATE THAT PHYSICAL PARTS ARE AVAILABLE FOR ORDERING.

CONTACT DELPHI SALES TO ASSURE AVAILABILITY OF PARTS.

DWG TYPE: PART DRAWING

STYLE

VOLUME (CM³): SEE CHART

DISTR CODE: D

UNLESS OTHERWISE SPECIFIED

THIS DOCUMENT IS IN ACCORDANCE WITH ASME Y14.5M-1994 AS AMENDED BY THE GM GLOBAL DIMENSIONING AND TOLERANCING ADDENDUM - 1997. ALL GEOMETRIC TOLERANCES AND RELATED DATUMS APPLY RFS. RULE #1 (PERFECT FORM AT MMC) DOES NOT APPLY WHEN RELATIONSHIP BETWEEN FEATURES IS ESTABLISHED BY ORIENTATION OR LOCATION TOLERANCES. SEPARATE POSITION CALLOUTS MAY BE GAGED SEPARATELY, REGARDLESS OF DATUM REFERENCE.

ALL DIMENSIONS ARE IN MILLIMETERS

REFERENCE

THIRD ANGLE PROJECTION

DO NOT SCALE

USE MATH DATA

CAD NX

DELPHI

DELPHI PACKARD ELECTRICAL/ELECTRONIC ARCHITECTURE
WARREN, OH
COPYRIGHT 1994 DELPHI CORPORATION AND/OR ITS AFFILIATES. ALL RIGHTS RESERVED. REVISED 2015
THIS DRAWING IS THE PROPERTY OF DELPHI CORPORATION AND CONTAINS DELPHI CONFIDENTIAL INFORMATION. THE REPRODUCTION, DISTRIBUTION AND UTILIZATION OF THIS DOCUMENT OR ITS RELATED CAD MATH DATA, AS WELL AS COMMUNICATION OF ANY CONTENT TO OTHERS, WITHOUT EXPRESS AUTHORIZATION, IS PROHIBITED.

		DATE
DR		
APVD1	K. MONTERO	19OC94
APVD2	D. BRANTINGHAM	19OC94
APVD3	S. C. HSIEH	04MR95
APVD4		
APVD5		

SUBSTANCES OF CONCERN AND RECYCLED CONTENT PER DELPHI 10949001

MATERIAL: SEE CHART

DRAWING NAME: TAXI SEAL CBL 1W GT

DRAWING NUMBER: 12191225

SIZE	SCALE	FRAME NO	SHEET NO	STG	REV	N/P
A1x5	20:1	1 OF 3	1 OF 1	R	37	-

12191225

Mouser Electronics

Authorized Distributor

Click to View Pricing, Inventory, Delivery & Lifecycle Information:

Aptiv:

15366066 15366066-B 15366067 15366067-B 15366064 15366065 15366065-B 15366063 15366064-B